CATASTROPHIC ERROR-PROPAGATION IN CONVOLUTIONAL CODES

Reprinted from:
11th Midwest Symp. on Circuit Th
Univ. of Notre Dame, May 13-14,1

James L. Massey
Department of Electrical Engineering
University of Notre Dame
Notre Dame, Ind. 46556

ELEVENTH MIDWEST SYMPOSIUM ON CIRCUIT THEORY
MAY 13-14, 1968
UNIVERSITY OF NOTRE DAME
NOTRE DAME, INDIANA 46556

Summary

A class of powerful error-correcting convolutional codes is demonstrated which exhibit catastrophic error-propagation in the sense that any reasonable decoder for a code in this class will commit infinitely many decoding errors for certain channel error patterns with only finitely many errors.

Introduction

The general form of a rate $R = 1/2$ binary systematic convolutional coding system is shown in Fig. 1. $I(D) = i_0 \oplus i_1 D \oplus i_2 D^2 \oplus \ldots$ is the D-transform of the sequence of information digits.

$$G(D) = g_0 \oplus g_1 D \oplus \ldots \oplus g_M D^M$$

is the digital transfer function which defines the code, and the code is said to have memory-order M, $M < \infty$. $I(D)$ is transmitted directly over the channel as is also the filter output $I(D)G(D)$. Since $N = 2$ transmitted digits and $K = 1$ information digit occur at each time instant, the code is said to have rate $R = K/N = 1/2$. $E_1(D)$ and $E_2(D)$ are the transforms of the sequences of channel noise digits which corrupt the transmitted digits. Letting $||A(D)||$ denote the number of non-zero terms in the transform $A(D)$, we see that $||E_1(D)|| + ||E_2(D)||$ is the total number of errors introduced by the channel into the transmitted data.

At the decoder, the syndrome $S(D)$ is first formed. From Fig. 1, we have

$$S(D) = G(D)\,[I(D) \oplus E_1(D)] \oplus [I(D)\,G(D) \oplus E_2(D)]$$

which reduces to

$$S(D) = G(D)E_1(D) \oplus E_2(D). \tag{1}$$

The asterisks in Fig. 1 denote the decoding estimates of the indicated quantities, e.g. $I^*(D) = i_0^* \oplus i_1^* D \oplus i_2^* D^2 \oplus \ldots$ where i_u^* is the decoding estimate of i_u. Note that

$$I^*(D) = I(D) \oplus [E_1(D) \oplus E_1^*(D)]$$

so that $E_1(D) \oplus E_1^*(D)$ is the transform of the sequence of decoding mistakes. Note further that the time instant u term in $E_1(D)$ is estimated by applying

the boolean function f to the digits in $S(D)$ over time units u through $u + M$ as modified by the feedback of the M preceding decoding estimates. This feedback gives rise to the error-propagation effect[1] whereby erroneous decoding estimates tend to trigger successive decoding mistakes.

Catastrophic Error-Propagation

Definition: A decoder is said to exhibit catastrophic error-propagation when a finite number of channel errors results in infinitely many decoding mistakes, i.e. when

$$||E_1(D)|| + ||E_2(D)|| < \infty \quad \text{but} \quad ||E_1(D) \oplus E_1^*(D)|| = \infty .$$

We next exhibit the existence of some apparently well-designed convolutional coding systems that exhibit catastrophic error-propagation. The discussion will be facilitated by introducing the notation $A(D)_{[u,u+v]}$ to denote the portion of $A(D)$ consisting of the terms with degrees u through $u + v$ inclusive.

If the convolutional code has minimum distance d, then it is well known that decoding functions f exist such that $E_1^*(D) = E_1(D)$ whenever

$$||E_1(D)_{[u,u+M]}|| + ||E_2(D)_{[u,u+M]}|| \leq e \qquad u = 0,1,2,\ldots \tag{2}$$

for any integer e such that $d > 2e$. Such a decoder is said to be e-error-correcting. It is further known[2] that for any rate $R = K/N$, there exist codes such that $H(d/n) \geq 1-R$ where $n = N(M+1)$ is the decoding constraint length and $H(x) = -x \log_2 x - (1-x) \log_2 (1-x)$ is the entropy function.

Now let $G'(D)$ be any code of memory order M' with minimum distance d', $d' \geq 5$. Consider the new code of memory order $M = 2M' + 1$ defined by

$$G(D) = (1 \oplus D^{M'+1})\, G'(D). \tag{3}$$

This code has minimum distance $d \geq d'$ since from (3) we see that $G(D)$ and $G'(D)$ coincide over the original constraint length. Note also that $n = 2(M+1) = 2 \cdot 2\,(M' + 1) = 2n'$. We now show that any e-error-correcting decoder for this code, $e \geq 2$, exhibits catastrophic error-propagation.

To show this, consider first the error patterns $E_1(D) = (1 \oplus D^{M'+1})^{-1}$ and $E_2(D) = 0$. From (1) and (3), we find $S(D) = G'(D)$. We further note that

$$||E_1(D)_{[u,u+M]}|| + ||E_2(D)_{[u,u+M]}|| =$$

$$||[1 \oplus D^{M'+1}]^{-1}_{[u,u+M]}|| \leqq 2 \qquad u = 0,1,2,\ldots$$

so we may use (2) to conclude that $E_1^*(D) = E_1(D) = (1 \oplus D^{M'+1})^{-1}$.

Consider next that $E_1(D) = 0$ and $E_2(D) = G'(D)$. Again, from (4) we find $S(D) = G'(D)$ so the decoder must again estimate $E_1^*(D) = (1 \oplus D^{M'+1})^{-1}$. But note in our second case

$$||E_1(D)|| + ||E_2(D)|| = ||G'(D)|| < \infty$$

but

$$||E_1(D) \oplus E_1^*(D)|| = ||(1 \oplus D^{M'+1})^{-1}|| = \infty$$

so that the decoder exhibits catastrophic error propagation as claimed. We note further that d' might have been the maximum distance attainable with memory order M' in which case

$$H(d/n) \geqq H\left(\frac{d'}{2n'}\right) \geqq \frac{1}{2} H\left(\frac{d'}{n'}\right) \geqq \frac{1}{2}(1-R)$$

where the middle inequality follows from the convexity of $H(x)$.

The above arguments can be readily generalized to the following:

<u>Theorem</u>: For any code rate $R = K/N$, there exist systematic binary convolutional codes for every constraint length n such that their minimum distance satisfies

$$H\left(\frac{d}{n}\right) \geqq \frac{1}{2}(1-R)$$

and such that any e-error-correcting decoder, $e \geqq 2$, for such codes exhibits catastrophic error-propagation.

There are other disturbing facts about the codes considered above. For instance, if $E_1(D) = F_1(D)$ and $E_2(D) = F_2(D) \oplus G'(D)$ where

$$||F_1(D)_{[u,u+M]}|| + ||F_2(D)_{[u,u+M]}|| \leqq e - 2 \qquad u = 0,1,2,\ldots,$$

then for any e-error correcting decoder

$$E_1(D) \oplus E_1^*(D) = (1 \oplus D^{M'+1})^{-1} ,$$

i.e. the same decoding mistakes are made as were made previously. The import of this is that the decoder is not easily "jarred" from its catastrophic error-propagation condition by further channel errors beyond those initially triggering the catastrophe.

A final note of caution is in order concerning the interpretation of this paper. We have not shown that feedback decoders for convolutional codes are generally undesirable--in fact, our opinion is wholly to the contrary. What we have shown is that injudicious choice of the code can render feedback decoding a perilous venture.

References

[1] J. Massey and R. Liu, "Application of Lyapunov's Direct Method to the Error-Propagation Effect in Convolutional Codes," IEEE Trans. on Info. Th., IT-10, July, 1964, pp. 248-250.

[2] J. Massey, "Threshold Decoding," M.I.T. Press, 1963, pp. 15-17.

Acknowledgment

This work was supported by the National Aeronautics and Space Administration, NASA Grant NGR 15-004-026, in liaison with the Flight Data Systems Branch of the Goddard Space Flight Center.

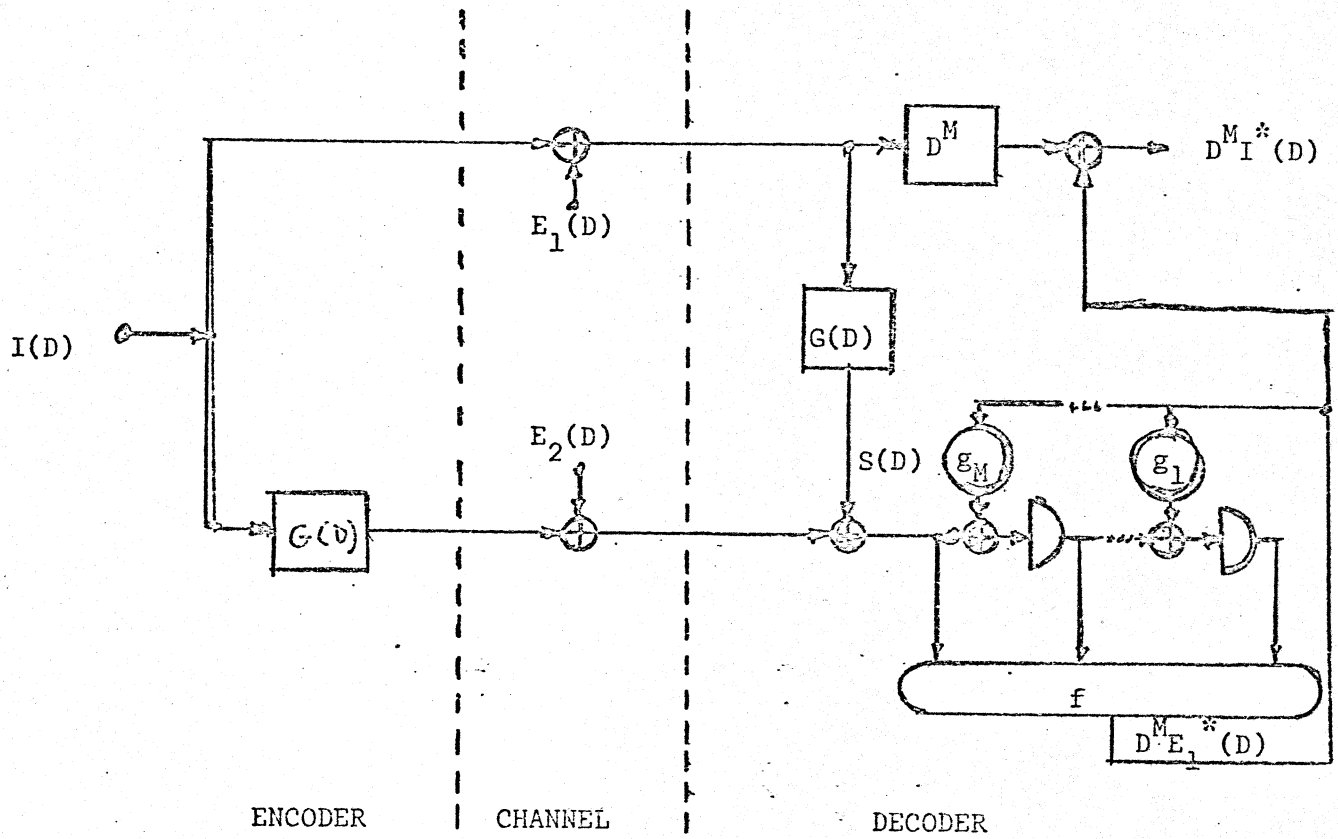

FIG. 1 A General $R = \frac{1}{2}$ Binary Convolutional Coding System